LM8HC-SW LM12HC-SW LM16HC-SW LM25HC-SW LM35HC-SW LM50HC-SW

HC-SW Series

For more information please contact:

BOCK OPTRONICS INC.
14 Steinway Blvd., Unit 7
Toronto, Ontario M9W 6M6

Tel: (416) 674-2804
sales@bockoptronics.ca
www.bockoptronics.ca

- Incorporating Kowa's special coating technology, the 1" format HC-SW series will maintains high transmission from 800nm to 1900nm.
- Designed for Near Infrared(NIR) and Short Wavelength Infrared (SWIR) applications.

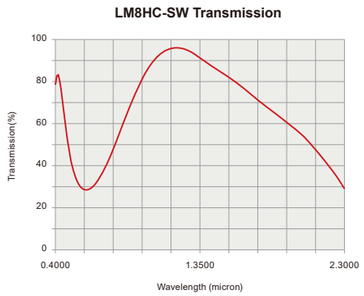

LM8HC-SW

1" 2/3" 1/1.8" 8mm FIXED Fixed Focal MEGA Megapixel C-mt C-mount METAL Metal Body IR Infrared

Model	LM8HC-SW
Focal Length(mm)	8
Image Size(mm)	12.8×9.6(Φ16)
Iris Range(F-stop)	F1.4~F16
Focusing Range(m)	0.1~∞
Control Iris	Manual
Control Focus	Manual
Shooting Range at M.O.D.(mm)	196.0(H)×143.2(V)
Angle of View (Degrees) 1 Inch	79.4×63.0
2/3 Inch	58.3×44.7
1/1.8 Inch	48.5×36.9
TV Distortion(%)	−1.2
Back Focus in Air(mm)	11.2
Mount	C-mount
Filter Thread(mm)	M55×P0.75
Size(mm)	Φ57×58
Weight(g)	205
Temperature Range	−10°C~+50°C

LM12HC-SW

1" 2/3" 1/1.8" 12.5mm FIXED Fixed Focal MEGA Megapixel C-mt C-mount METAL Metal Body IR Infrared

Model	LM12HC-SW
Focal Length(mm)	12.5
Image Size(mm)	12.8×9.6(Φ16)
Iris Range(F-stop)	F1.4~F16
Focusing Range(m)	0.3~∞
Control Iris	Manual
Control Focus	Manual
Shooting Range at M.O.D.(mm)	330.6(H)×243.5(V)
Angle of View (Degrees) 1 Inch	55.6×42.5
2/3 Inch	39.1×29.5
1/1.8 Inch	32.1×24.2
TV Distortion(%)	−1.6
Back Focus in Air(mm)	12.6
Mount	C-mount
Filter Thread(mm)	M35.5×P0.5
Size(mm)	Φ43×51.5
Weight(g)	160
Temperature Range	−10°C~+50°C

† Images may differ from the actual product.

LM16HC-SW

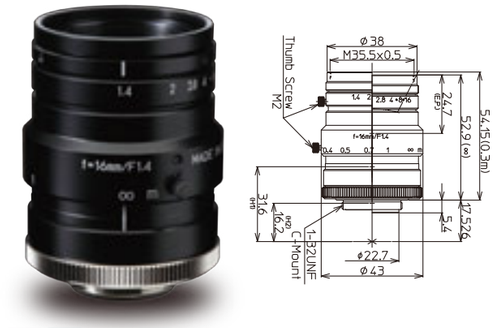

1" 2/3" 1/1.8" 16mm FIXED Fixed Focal MEGA Megapixel C-mt C-mount METAL Metal Body IR Infrared

LM25HC-SW

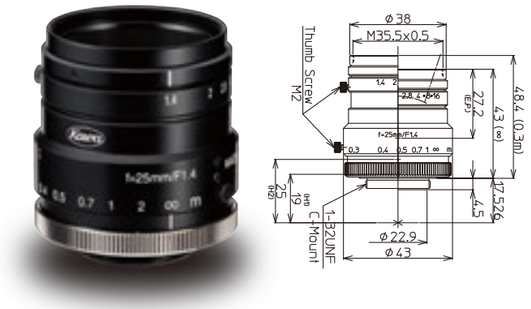

1" 2/3" 1/1.8" 25mm FIXED Fixed Focal MEGA Megapixel C-mt C-mount METAL Metal Body IR Infrared

LM35HC-SW

1" 2/3" 1/1.8" 35mm FIXED Fixed Focal MEGA Megapixel C-mt C-mount METAL Metal Body IR Infrared

LM50HC-SW

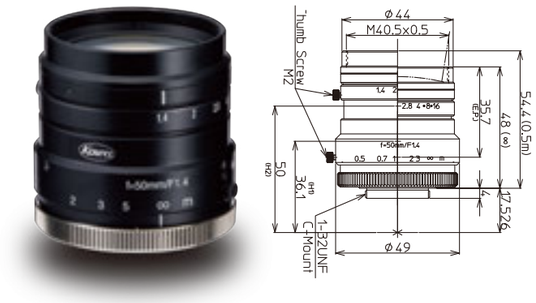

1" 2/3" 1/1.8" 50mm FIXED Fixed Focal MEGA Megapixel C-mt C-mount METAL Metal Body IR Infrared

Model	LM16HC-SW	LM25HC-SW	LM35HC-SW	LM50HC-SW
Focal Length(mm)	16	25	35	50
Image Size(mm)	12.8×9.6(Φ16)	12.8×9.6(Φ16)	12.8×9.6(Φ16)	12.8×9.6(Φ16)
Iris Range(F-stop)	F1.4~F16	F1.4~F16	F1.4~F16	F1.4~F16
Focusing Range(m)	0.3~∞	0.3~∞	0.3~∞	0.5~∞
Control Iris	Manual	Manual	Manual	Manual
Control Focus	Manual	Manual	Manual	Manual
Shooting Range at M.O.D.(mm)	251.5(H)×186.2(V)	160.7(H)×119.2(V)	110.1(H)×82.0(V)	121.8(H)×91.3(V)
Angle of View (Degrees) 1 inch	44.3×33.6	29.3×22.0	20.9×15.8	14.5×10.8
2/3 inch	30.8×23.2	20.2×15.1	14.4×10.8	10.0×7.5
1/1.8 inch	25.3×19.0	16.5×12.4	11.8×8.8	8.2×6.2
TV Distortion(%)	−1.0	−1.0	−0.5	0.05
Back Focus in Air(mm)	12.6	16.5	16.8	14.8
Mount	C-mount	C-mount	C-mount	C-mount
Filter Thread(mm)	M35.5×P0.5	M35.5×P0.5	M35.5×P0.5	M40.5×P0.5
Size(mm)	Φ43×52.9	Φ43×43	Φ43×43	Φ49×48
Weight(g)	150	135	135	210
Temperature Range	−10°C~+50°C	−10°C~+50°C	−10°C~+50°C	−10°C~+50°C

† Images may differ from the actual product.